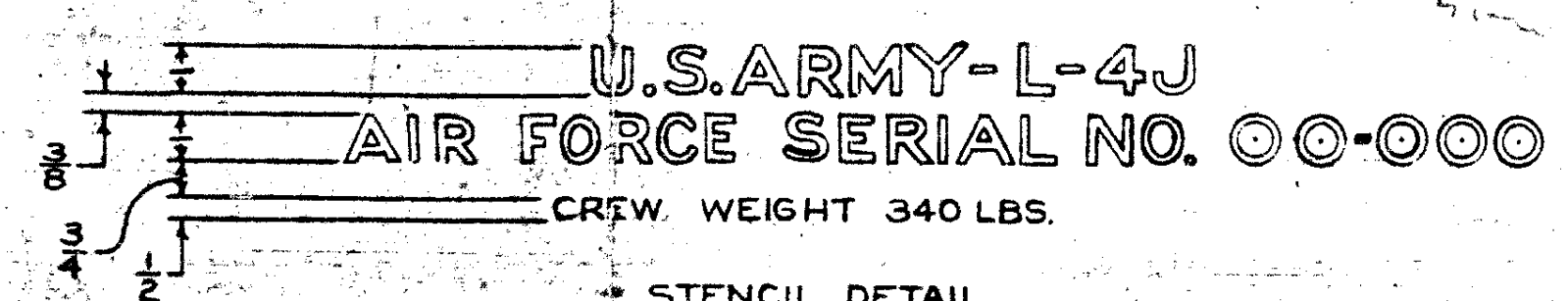
U.S. ARMY-L-4J
AIR FORCE SERIAL NO. 00-000
CREW WEIGHT 340 LBS.
3/8
3/4
1/2

STENCIL DETAIL
FIG. 1
(SEE NOTE 4)

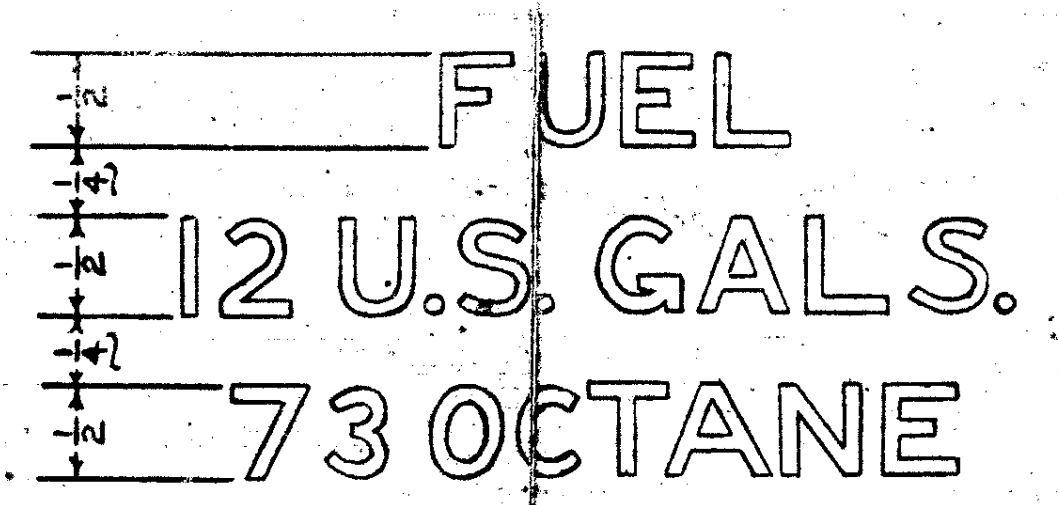
FUEL
12 U.S. GALS.
73 OCTANE
1/2
1/4
1/2
1/4
1/2

STENCIL DETAIL
FULL SIZE
FIG. 2
(SEE NOTE 4)

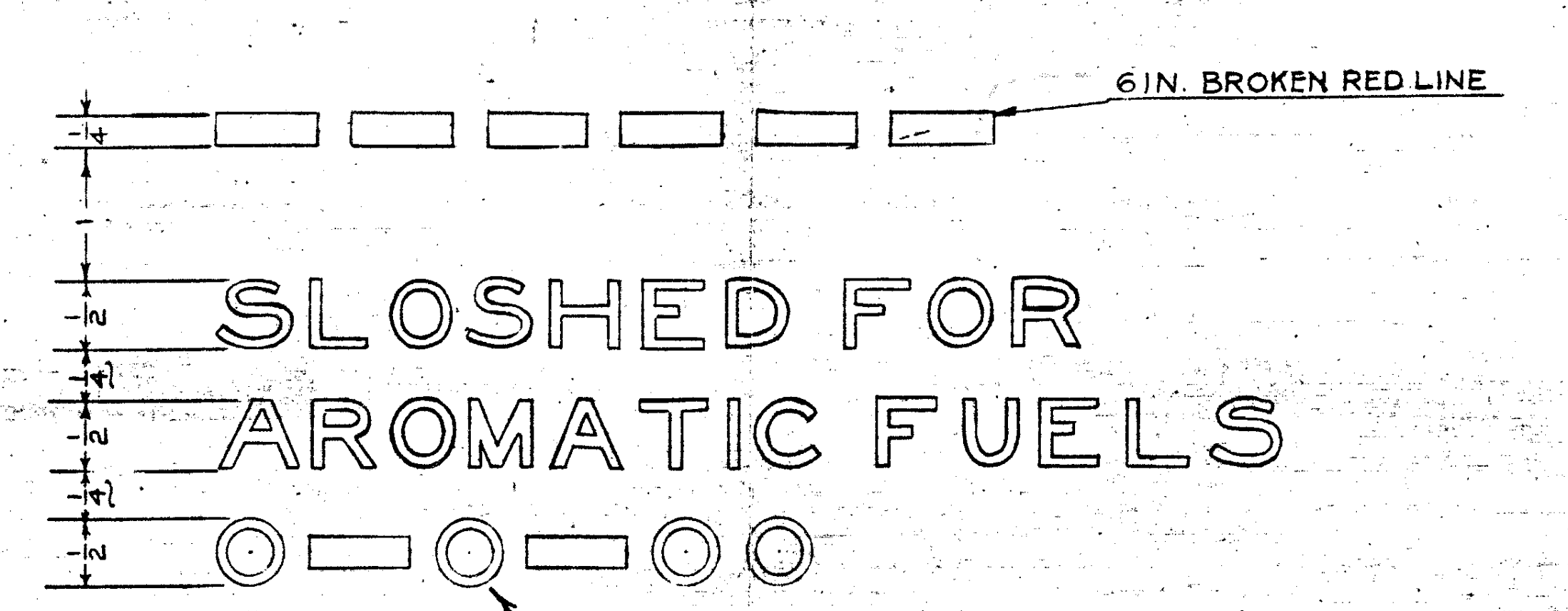
6 IN. BROKEN RED LINE
SLOSHED FOR
AROMATIC FUELS
0-0-00
DATE OF STENCILLING TO BE PLACED HERE

STENCIL DETAIL
FULL SIZE
FIG. 3
(SEE NOTE 4)

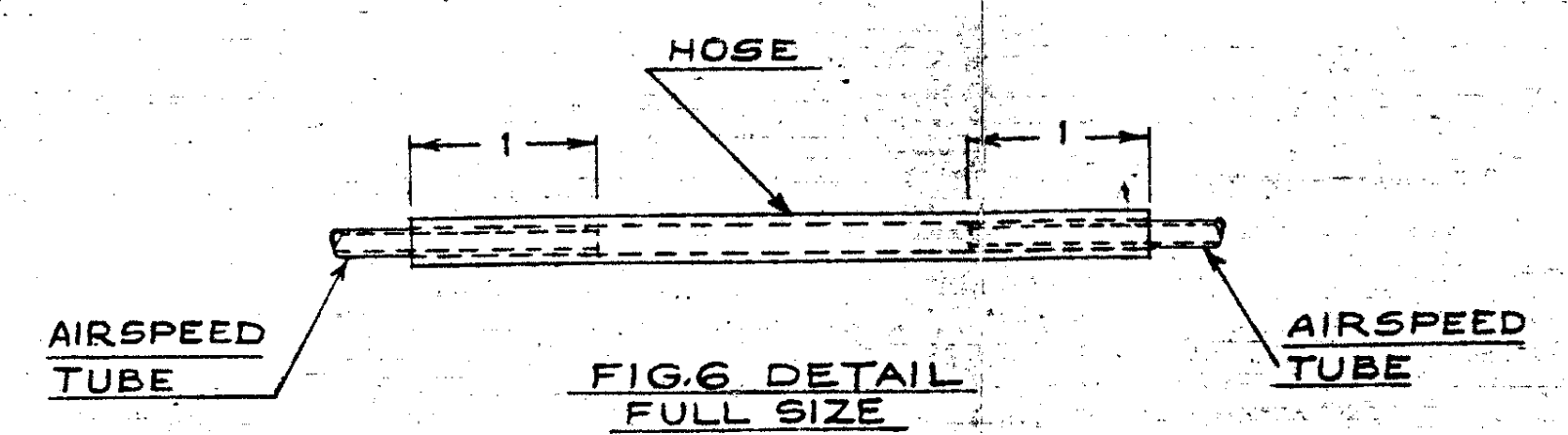
HOSE
1
1
AIRSPEED TUBE
AIRSPEED TUBE

FIG. 6 DETAIL
FULL SIZE

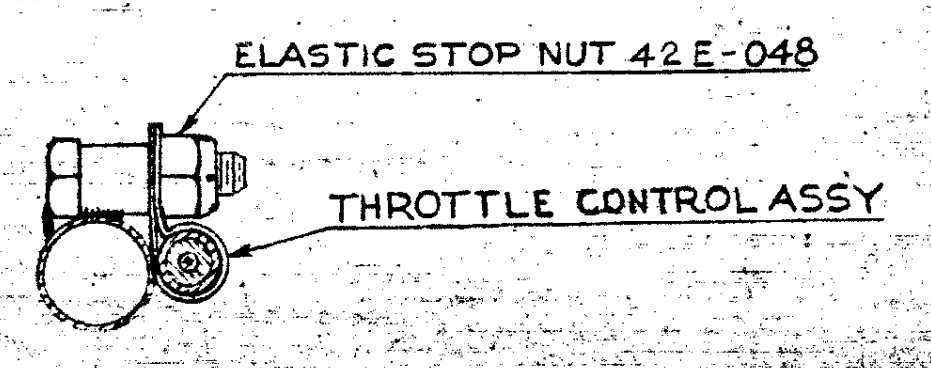
ELASTIC STOP NUT 42E-048
THROTTLE CONTROL ASSY

SECTION B-B
FULL SIZE

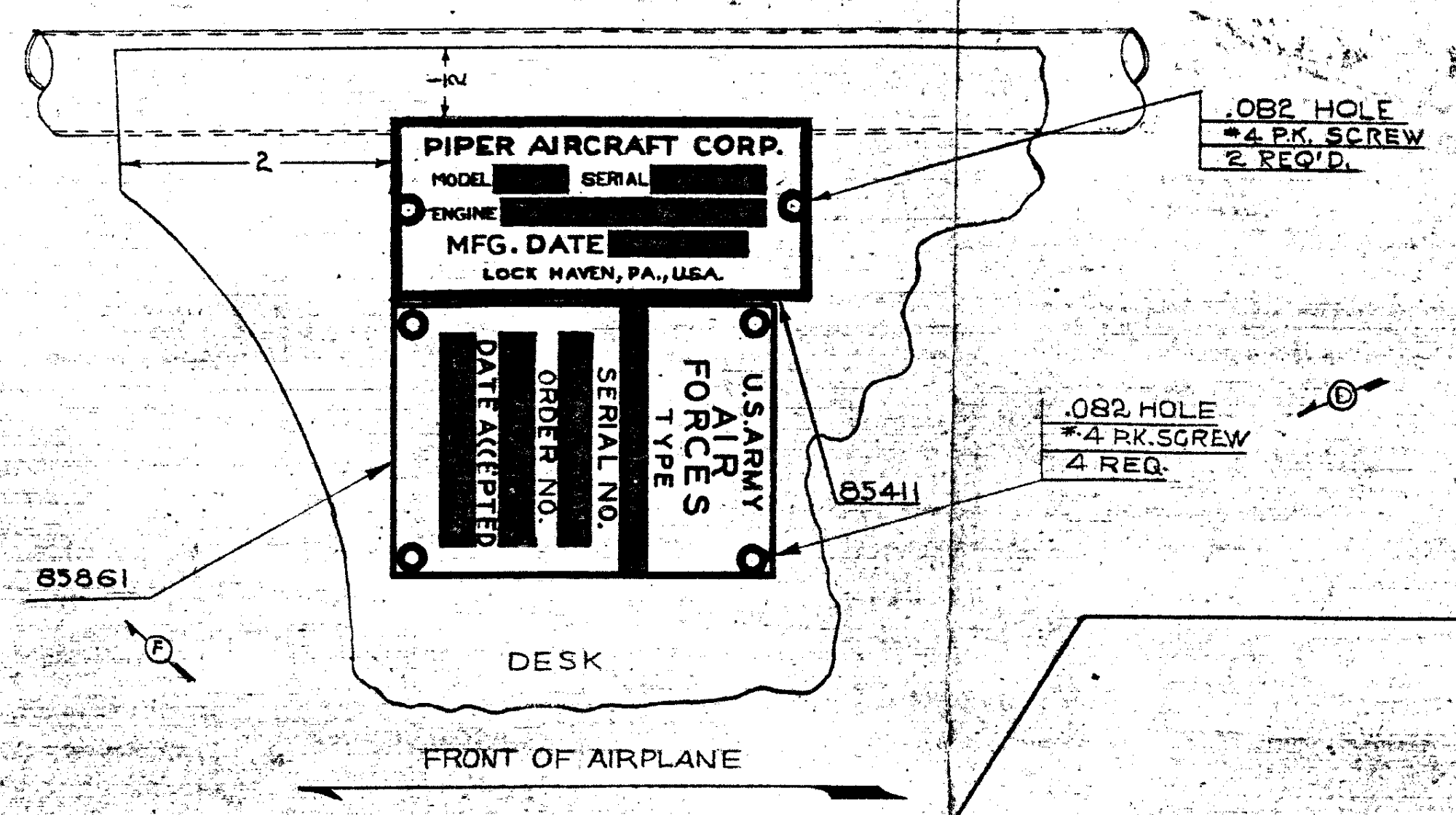
PIPER AIRCRAFT CORP.
MODEL
SERIAL
ENGINE
MFG. DATE
LOCK HAVEN, PA., U.S.A.
U.S. ARMY
AIR
FORCES
TYPE
SERIAL NO.
ORDER NO.
DATE ACCEPTED
.082 HOLE
#4 P.K. SCREW
2 REQ'D.
.082 HOLE
#4 P.K. SCREW
4 REQ.
85411
85861
2
DESK
FRONT OF AIRPLANE

FIG. 8 DETAIL
FULL SIZE

AIRSPEED TUBE
TAPED & SHELLACKED
AT CHANNEL
13541-10
IGNITION SWITCH INST.
84262
RADIO EQUIPMENT INST.
84545
ENCLOSURE INST.
54006
.102 HOLE
#6 P.K. SCREW
5 REQ'D (EQUALLY SPACED)
SEE FIG. 2
INSTRUMENT PANEL INST.
53513
SEE FIG. 6
FOR HOSE
CONNECTION
DETAIL
STABILIZER ADJUSTMENT
CONTROL INST.
42902
SEE FIG. 9
FUEL SHUT-OFF
CONTROL INST.
50631
10015
41512
SEE FIG. 10
41221
41541
41551
BACK BELT INST.
50842
SEE FIG. 8 FOR SERIAL NUMBER
PLACARD & AIRPLANE & ENGINE
DATA NAME PLATE INSTALLATION
DESK INST.
53603
1'2"
SEE FIG. 4
SEE NOTE 5
FUEL
12 U.S. GALS.
73 OCTANE
SLOSHED FOR
AROMATIC FUELS
0-0-00
W/H SLEEVE W61X3
W/H COMPRESSION NUT W60X3
13541-4
83161-2
SEE FIG. 3
B
B
1
4 1/4
7 3/4
2 3/4
11
U.S. ARMY-
AIR FORCE SERIA
CREW WEIGHT 34
83891-2
SEE FIG. 1
SEE FIG. 7
CONTROL STICK
PLACARD INST.
82311
50982 & 50942
SEAT BACK &
BOTTOM CANVAS
LACED ON WITH
#4 MASON LINE
MODEL SCR-610 RADIO
EQUIPMENT INST. 86016
24235
CARBURETOR
HEAT CONTROL INST.
50891
52362
SEE FIG. 5
RUSCO SAFETY BELT ASS'Y
AE 300D SB521 R
AE 300D SB522 L
OR
AE 300D SB521 R
AE 305D SB693 L
FIRE EXTINGUISHER INST.
82692
A
A
SEE FIG. 4
52982
REAR SEAT INST.
50503
REAR SAFETY BELT INST.
50822

SLIDING WINDOW
SLIDING WINDOW CHANNEL
LEVELING POINT
LEVELING POINT
4
3
1/2
5
1/2
3
1/2
LEVEL HERE
COLOR TO BE MURPHY #1140 YELLOW
THROTTLE
FRONT OF AIRPLANE

FIG. 10
STENCIL DETAIL
6 IN. = 1 FT.

NOTE:

1. SAFETY BELTS PURCHASED FROM: RUSSELL MFG. CO., MIDDLETOWN, CONN.
2. THIS DWG. APPLIES TO MODEL L-4A, SERIAL NO. 12341 & UP.
3. PARTS MARKED L USED ON LEFT SIDE ONLY
PARTS MARKED R USED ON RIGHT SIDE ONLY.
4. ALL STENCILS SHALL BE OF INSIGNIA BLUE COLOR UNLESS OTHERWISE NOTED.
5. ALL STENCIL LOCATING DIMENSIONS TAKEN ALONG COVERING.

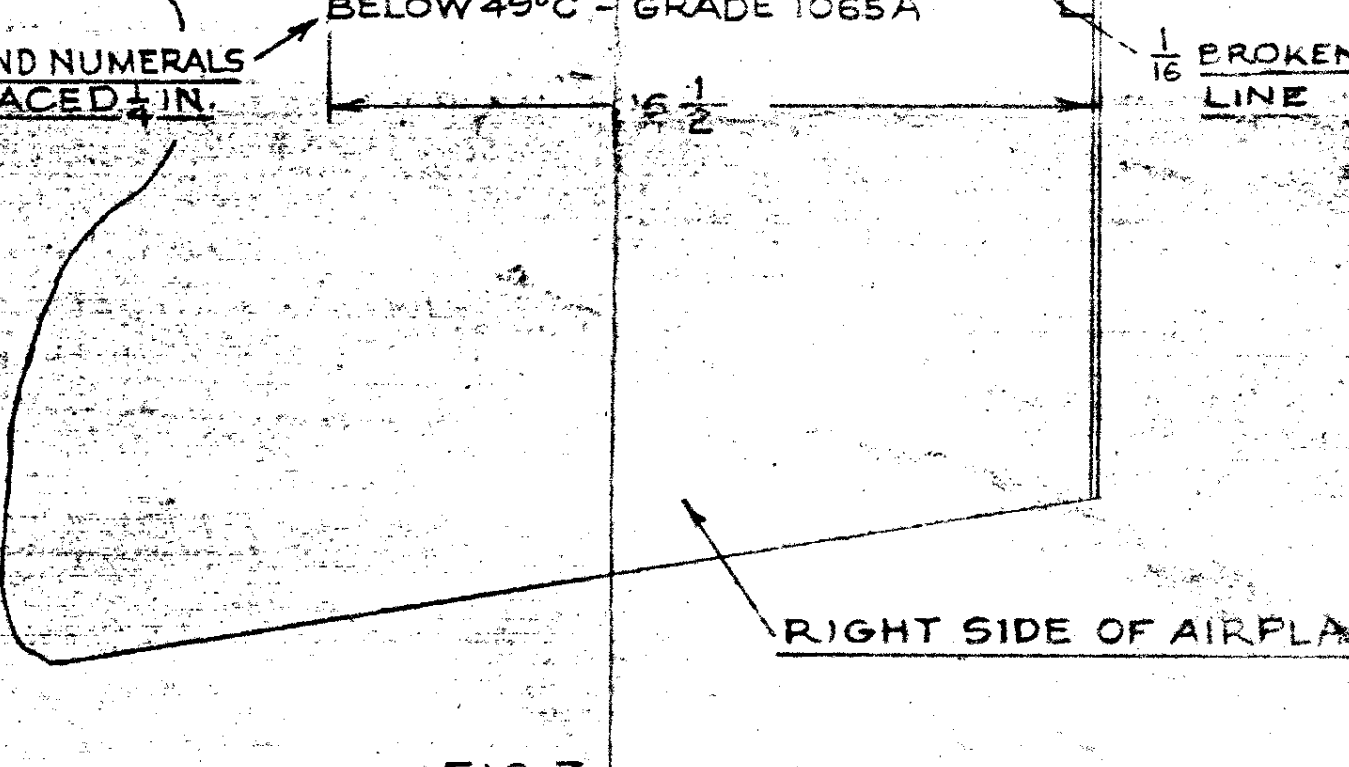
1/2 IN. LETTERS AND NUMERALS
WITH LINES SPACED 1/4 IN.
APART.
OPERATING
CONDITIONS
ABOVE 49°C -
BELOW 49°C -
ENGINE OIL
SPEC. AN-VV-O-446
GRADE 1080A
GRADE 1065A
15 3/4
SEE NOTE 5
1 1/2
6 1/2
1/16 BROKEN LINE
RIGHT SIDE OF AIRPLANE

FIG. 7
(SEE NOTE 4)

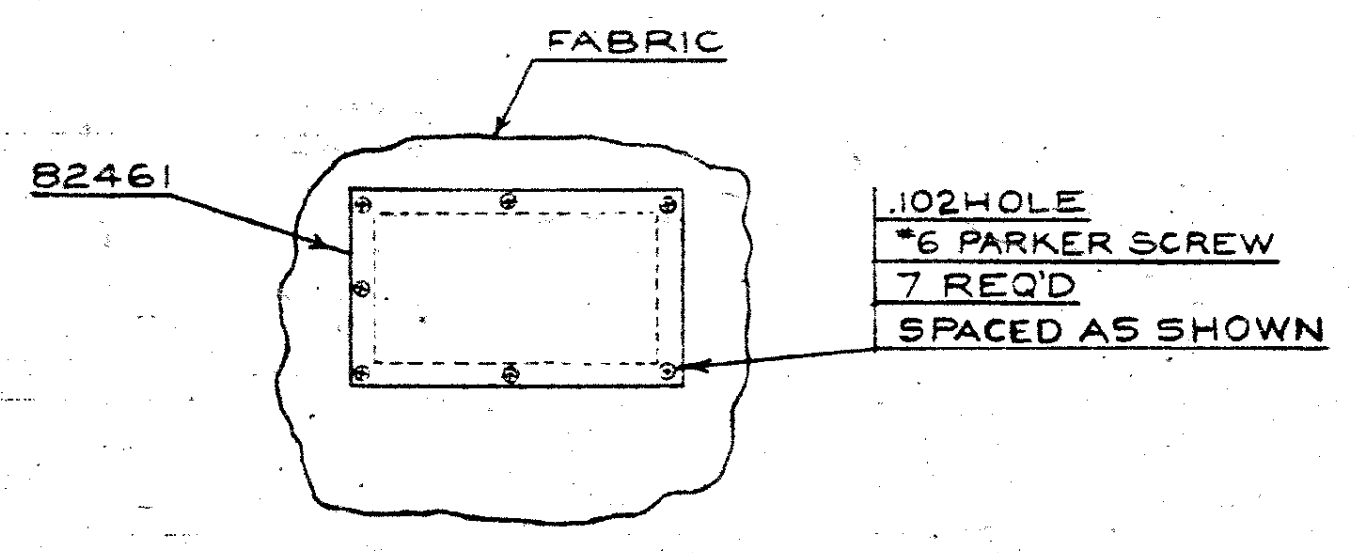
FABRIC
82461
.102 HOLE
#6 PARKER SCREW
7 REQ'D
SPACED AS SHOWN

FIG. 4

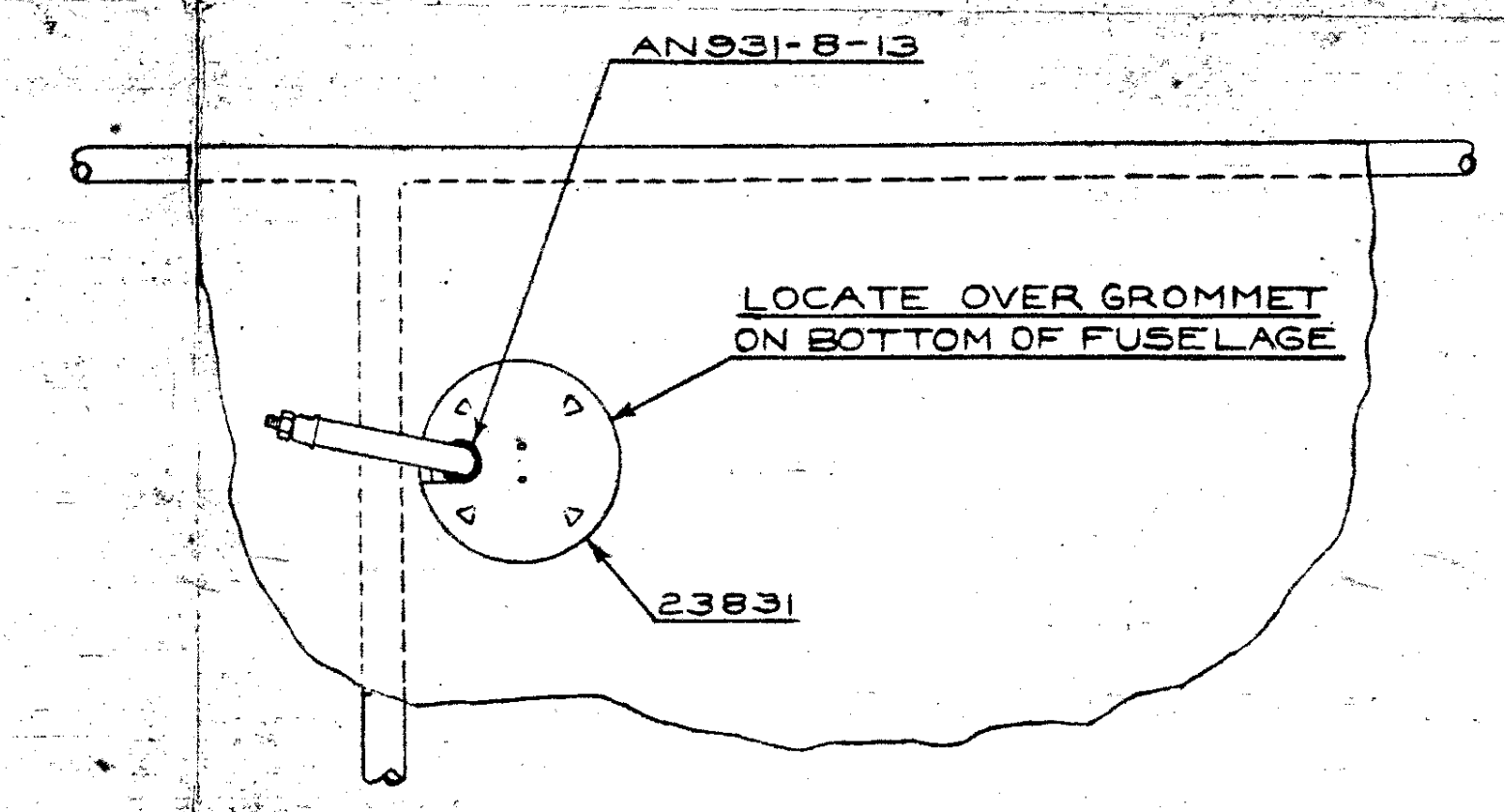
AN931-8-13
LOCATE OVER GROMMET
ON BOTTOM OF FUSELAGE
23831

FIG. 5

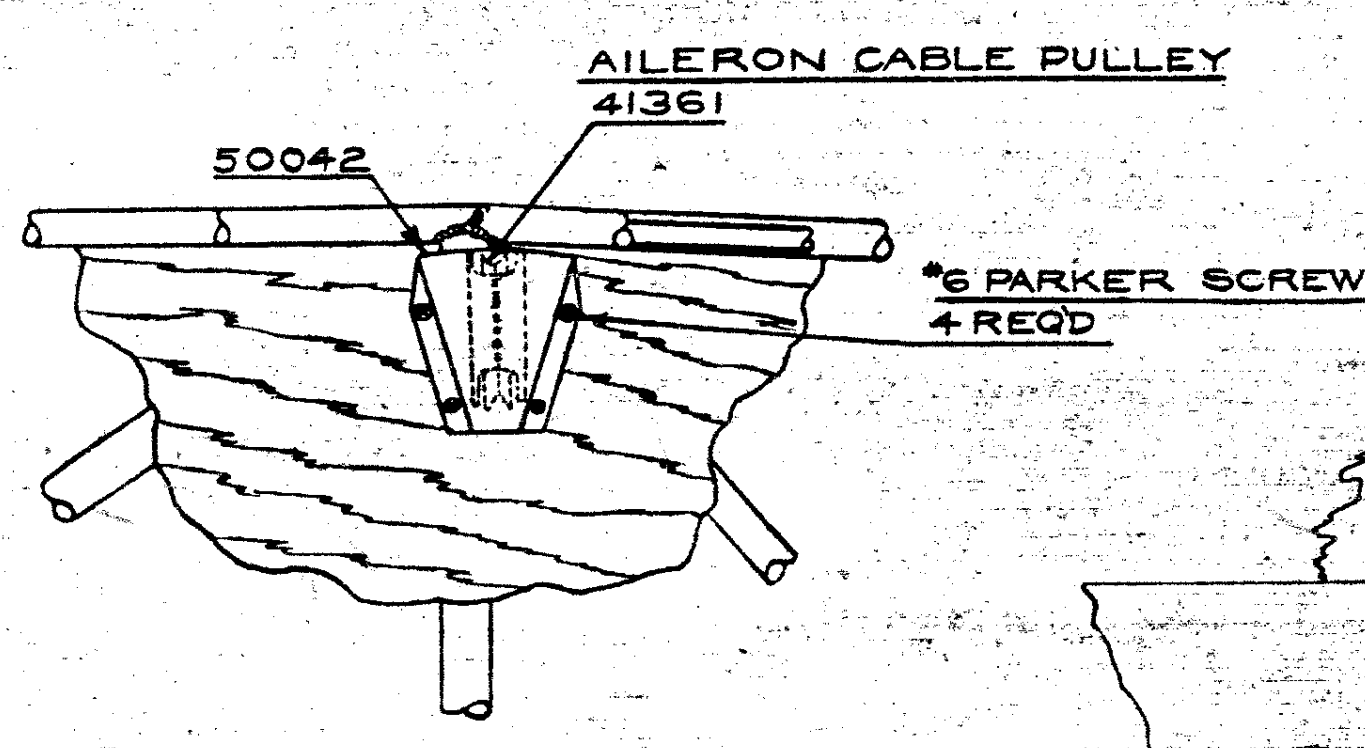
AILERON CABLE PULLEY
41361
50042
#6 PARKER SCREW
4 REQ'D

VIEW A-A
TOP VIEW OF AILERON CABLE PULLEY
HOUSING: RIGHT SHOWN, LEFT IDENTICAL

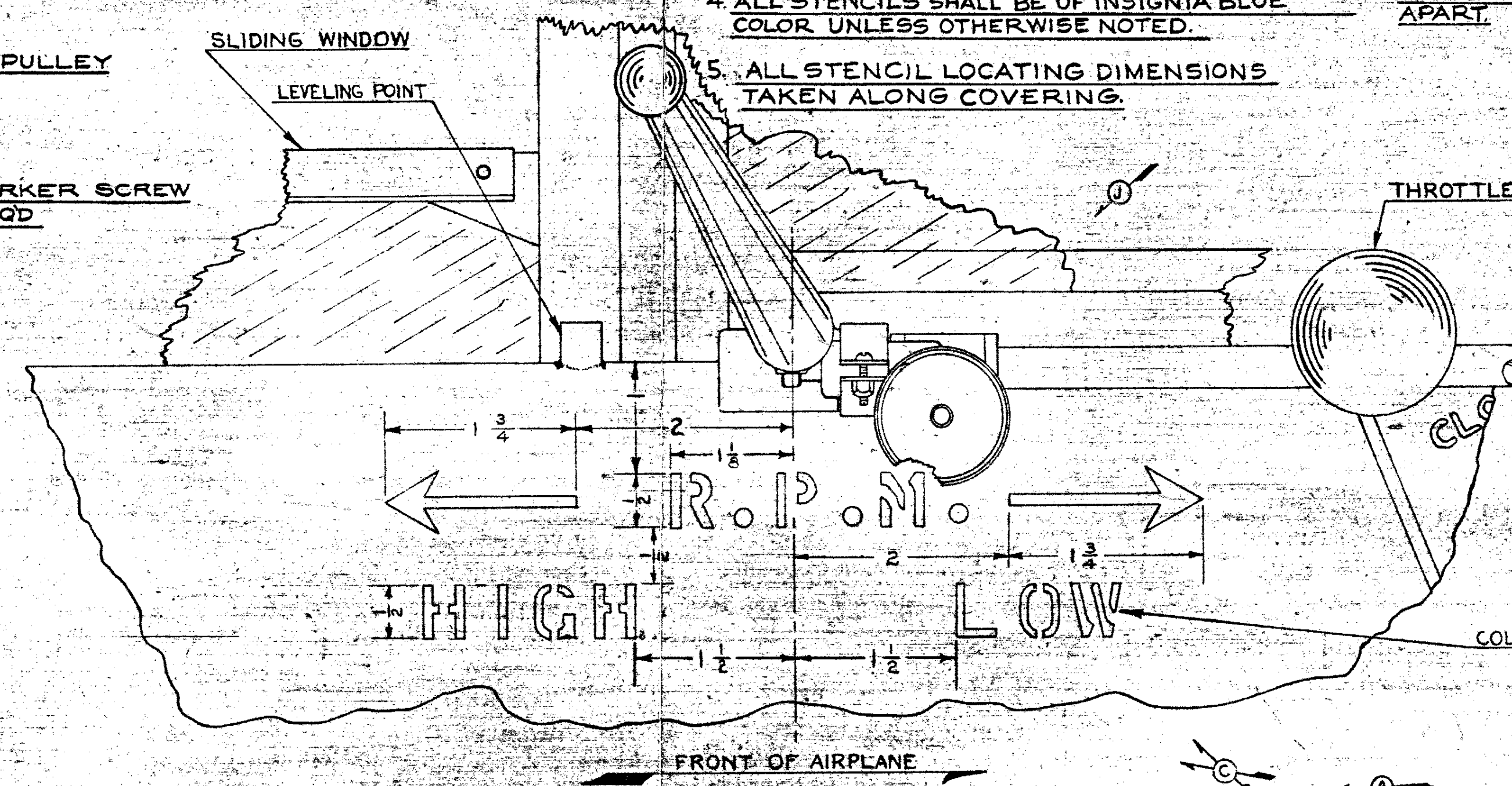
SLIDING WINDOW
LEVELING POINT
THROTTLE
1 3/4
2
1 1/8
R.P.M.
2
1 3/4
HIGH
LOW
1 1/2
1 1/2
COLOR TO BE MURPHY #1140 YELLOW
FRONT OF AIRPLANE

STENCIL DETAIL
FIG. 9
FULL SIZE
VIEW TAKEN FROM INSIDE OF COCKPIT

OCT -9 1974

LIMITS, SHOP PRACTICES AND FINISH, UNLESS OTHERWISE NOTED, TO BE IN ACCORDANCE WITH PIPER SPECIFICATIONS #5 AND #10.

PART NO.	NO. REQ	SIZE	DESCRIPTION / MATERIAL
86016	1		RADIO EQUIPMENT INST.
85861	1		AIRPLANE & ENGINE DATA NAME PLATE
#4	6	1/4 LONG	TYPE "A" STOVE HD. PK. SCREW
85411	1		SERIAL NUMBER PLACARD
42E-048	1		ELASTIC STOP NUT
42902	1		STAB. ADJ. CONTROL INST.
83161-2	1		HOSE
	1		W/H SLEEVE W61X3
	1		W/H COMPRESSION NUT W60X3
	1	AE300D SB521 AE300D SB522 OR AE300D SB521 AE305D SB693	RUSCO SAFETY BELT (SEE NOTE 1)
	1	11 FT. L	#4 MASON LINE
	27	3/4X6L	FRICTION TAPE
#6	27	3/8 LONG	TYPE "A" STOVE HD. PK. SCREW
AN931-8-13	2		GROMMET
84545	1		RADIO EQUIPMENT INST.
84262	1		IGNITION SWITCH INST.
83891-2	1		COWL WEBBING
82692	1		FIRE EXTINGUISHER INST.
82461	2		INSPECTION WINDOW
82311	1		CONTROL STICK PLACARD INST.
53603	1		DESK INST.
54006	1		ENCLOSURE INST.
53513	1		INSTRUMENT-PANEL INST.
52982	1		REAR SEAT BOTTOM CUSHION
10015	1		FRONT SEAT BACK CUSHION
52362	1		FRONT SEAT BOTTOM CUSHION
50982	1		FRONT SEAT BACK
50942	1		FRONT SEAT BOTTOM
50891	1		CARB. HEAT CONTROL INST.
50842	1		BACK BELTS INST.
50822	1		REAR SAFETY BELT INST.
50631	1		FUEL SHUT-OFF CONTROL INST.
50503	1		REAR SEAT INST.
50042	2		PULLEY HOUSING COVER
41551	1		THROTTLE LINK
41541	1		THROTTLE CONTROL ASS'Y
41512	2		THROTTLE
41361	2		AILERON CABLE PULLEY
41221	2		CONTROL STICK GRIP
24235	1		COVERED FUSELAGE ASS'Y
23831	2		INSPECTION PLATE
13541-4	1		AIRSPEED TUBING
13541-10	1		

SCALE 3" = 1 FT. & NOTED | TOTAL WT.-LBS

LET.	REVISION	DATE	BY
L	FIG. 10 ADDED	7-18-45	HMZ
K	10015 WAS 52852	6-28-45	HMZ
J	VIEW REVISED	5-11-45	J.B.M.
H	86016 RADIO EQUIPMENT INST. ADDED	1-23-45	J.B.M.
G	NOTE 6 REMOVED	11-9-44	I.D.B.
F	85861 WAS G.F.F. # [illegible]	11-9-44	I.D.B.
E	NOTE REVISED & NOTE 6 ADDED	10-14-44	I.D.B.
D	NAME PLATE & #4 P.K. SCREWS ADDED	10-14-44	I.D.B.
C	"HIGH" WAS "LOW" & "LOW" WAS "HIGH"	9-22-44	R.D.R.
B	FIG. 9 REVISED	7-11-44	R.D.R.
A	FIG. 9 ADDED	7-7-44	R.D.R.

MODEL	PER SHIP	NEXT ASSEMBLY	SUPERSEDES	SUP. BY
L-4A	1	85563	23876	

FUSELAGE ASS'Y-(COMPLETE)

PIPER AIRCRAFT CORP.
LOCK HAVEN, PENNA.

DRAWN	CHECKED	APPROVED
R. REEDER 6-27-44	R.E.T. 6-27-44	

24256